INSTALLATION INSTRUCTION

358 – LED Wall Sconce

WS-35819/ WS-35825/ WS-35837/ WS-35849/WS-35861

WAC LIGHTING
Responsible Lighting®

WARNING

IMPORTANT: NEVER attempt any work without shutting off the electricity.

- Read all instructions before installing.
- System is intended for installation by a qualified electrician in accordance with the National Electrical Code and local regulations.
- Go to the main fuse box, or circuit breaker. Place the main power switch in the "OFF" position and unscrew the fuse(s) or switch "OFF" the circuit breaker switch(es) that control the power to the fixture or room that you are working on.
- Place the wall switch in the "OFF" position.

CAUTION

- All parts must be used as indicated in these instructions. Do not substitute any parts, leave parts out, or use any parts that are worn out or broken. Failure to follow this instruction could invalidate the ETL/CETL listing of this fixture.
  CAUTION When handling the fixture, do not apply pressure to the LEDs. Hold the fixture by the base only.

AVERTISSEMENT

IMPORTANT : Coupez l'électricité avant TOUTE manipulation.

- Lisez toutes les instructions avant d'installer.
- Système est destiné à être installé par un électricien qualifié en conformité avec le code national de l'électricité et les règlements locaux.
- Accédez au panneau central de disjoncteurs ou de fusibles de votre demeure et placez l'interrupteur principal en position d'arrêt (« OFF »).
- Placez l'interrupteur mural en position d'arrêt (« OFF »).

MISE EN GARDE

- Toutes les pièces doivent être utilisées tel qu'il est indiqué dans ces instructions. Ne remplacez pas les pièces, n'en laissez pas de côté et ne les utilisez pas si elles sont usées ou brisées. Le non-respect de ces instructions peut annuler l'homologation ETL/CETL du luminaire. MISE EN GARDE Ors de la manipulation de l'appareil, ne pas appliquer de pression à la LED, tenir l'appareil par la seule base.

ADVERTENCIA

IMPORTANTE: NUNCA intente hacer trabajos sin desconectar el suministro eléctrico.

- Lea y comprenda todas las instrucciones e ilustraciones por completo antes de proceder con el ensamblaje e insta lación de esta lámpara.
- Sistema está disenado para ser instalado por un electricista calificado, de acuerdo con el código eléctrico nacional y las normas locales.
- Diríjase a la caja de fusibles o a la caja del interruptor de circuito principal en su hogar. Coloque el interruptor de ali mentación principal en la posición "OFF" (APAGADO).
- Coloque el interruptor de la pared en la posición "OFF" (APAGADO).

PRECAUCIÓN

- Todas las piezas deben usarse como lo indican estas instrucciones. No reemplace las piezas, noomita piezas durante la instalación ni utilice piezas gastadas o rotas. El incumplimiento de esta indicación podría invalidar la calificación
  ETL/CETL esta lámpara. PRECAUCIÓN Al manipular el aparato, no aplique presión a los LED, mantenga el aparato en la base sólo.

HARDWARE

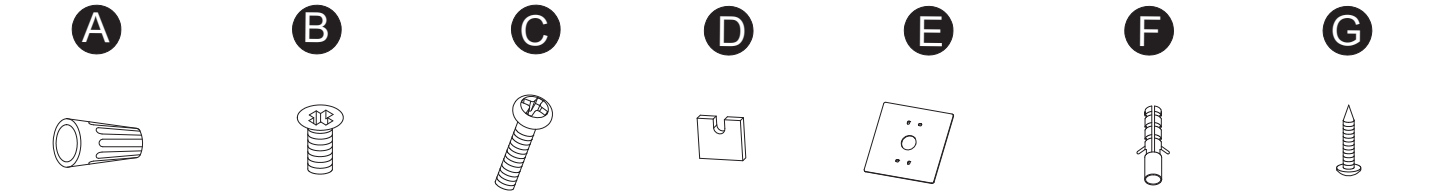

A	B	C	D	E	F	G
Wire Connector Qty: 3pcs+1 Extra 7EAC112201	Mounting Screw Qty:2pcs+1 Extra 7MPF0308S1(AL) 4MPF0308S3W5(WT) 1/8"-40X3/8 Nickel Plating/White	Assembly Screw Qty:2pcs+1 Extra 1/8"-40x1 Nickel Plating	Silicon Gasket Qty:2pcs 7TGD272501CL	Decorative Plate Qty:1pc 4MBA121244BA(AL) 4MBA121244W10(WT)	Plastic Anchor Qty: 2pcs+1 Extra 7TDD082401	Wood Screw Qty: 2pcs+1 Extra 7MPF2204J2 Φ4X22

waclighting.com
Phone (800) 526.2588
Fax (800) 526.2585

Headquarters/Eastern Distribution Center
44 Harbor Park Drive
Port Washington, NY 11050

Central Distribution Center
1600 Distribution Ct
Lithia Springs, GA 30122

Western Distribution Center
1750 Archibald Avenue
Ontario, CA 91760

WAC Lighting retains the right to modify the design of our products at any time as part of the company's continuous improvement program.

INSTALLATION INSTRUCTION

358 – LED Wall Sconce

WS-35819/ WS-35825/ WS-35837/ WS-35849/WS-35861

WAC LIGHTING
Responsible Lighting®

Fig.1

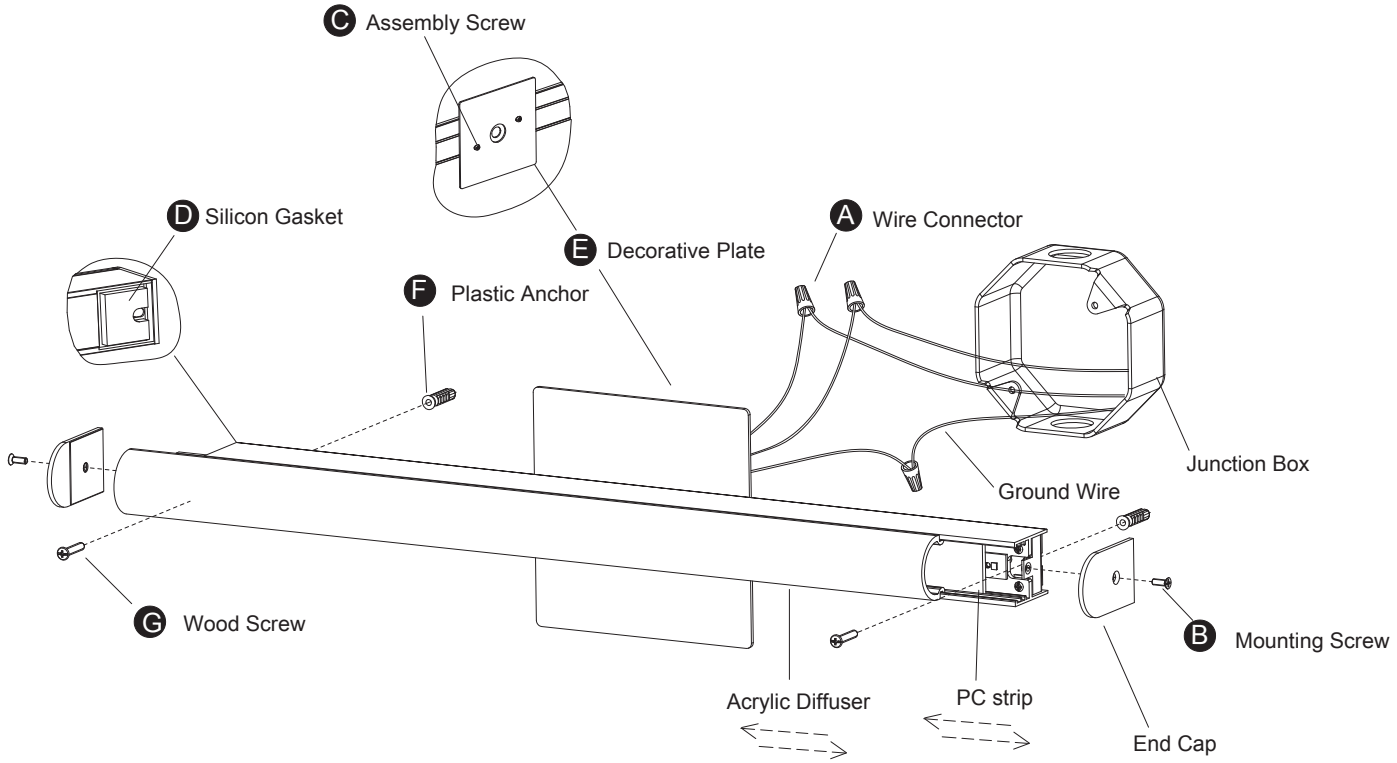

Fig.2

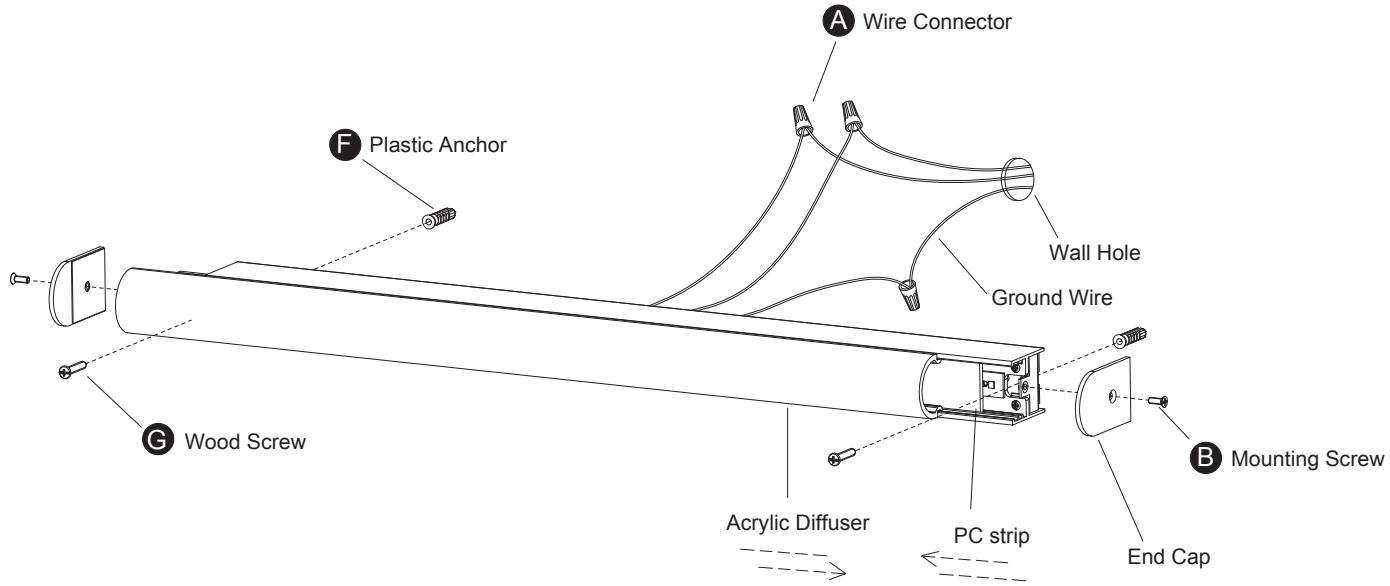

waclighting.com
Phone (800) 526.2588
Fax (800) 526.2585

Headquarters/Eastern Distribution Center
44 Harbor Park Drive
Port Washington, NY 11050

Central Distribution Center
1600 Distribution Ct
Lithia Springs, GA 30122

Western Distribution Center
1750 Archibald Avenue
Ontario, CA 91760

INSTALLATION INSTRUCTION

358 – LED Wall Sconce

WS-35819/ WS-35825/ WS-35837/ WS-35849/WS-35861

WAC LIGHTING

Responsible Lighting®

Installation Location

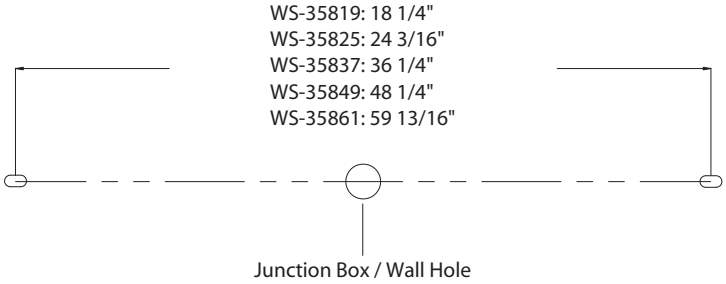

Fig.3 Wiring

Fixture Wires	House Wires
Black or Smooth	Black (Hot)
White or Ribbed	White (Neutral)
Bare wire (Ground)	Green or Bare Copper (Ground)

PREPARATION

1. Shut off the power at the circuit breaker and remove existing fixture, including the crossbar.
2. Carefully unpack your new fixture and lay out all the parts on a clear area. Be careful not to lose any small parts necessary for installation.

MOUNT ON THE JUNCTION BOX (Fig. 1)

3. Drill a fixture mounting hole according to (installation location), insert the plastic anchor (F). Line up the center line of the drill holes with respect to the center line of the junction box to allow the decorative plate (E) properly cover up the junction box opening on the wall.
4. Secure the decorative plate (E) to the fixture with assembly screw (C), then replace the existing silicon gasket with the supplied silicon gasket (D).
5. Remove the mounting screw (B) and the end cap from the fixture.
6. Connect the fixture's wires to house wires as shown in Fig.3, making sure that all wire connectors (A) are secured. If your outlet box has a green or bare copper ground wire, connect the fixture's ground wire to it. Otherwise, tuck the fixture's ground wire directly to the fixture. After wires are connected, tuck them carefully inside the junction box.
7. Slide acrylic diffuser and PC strip slightly out of the way to review the plastic anchor location on the back, then fasten the fixture to the wall using wood screw (G), make sure to align the decorative plate to adequately cover the junction box wall opening.
8. Secure the end cap to the fixture using mounting screw (B) to seal the acrylic diffuser.

OR

MOUNT WITHOUT JUNCTION BOX (Fig. 2)

3. Drill a fixture mounting hole according to (installation location), insert the plastic anchor (F).
4. Remove the mounting screw (B) and the end cap from the fixture.
5. Drill a small access hole in the wall behind the fixture and pull the house wires through the wall.
6. Connect the fixture's wires to house wires as shown in Fig.3, making sure that all wire connectors (A) are secured. If your outlet box has a green or bare copper ground wire, connect the fixture's ground wire to it. Otherwise, tuck the fixture's ground wire directly to the fixture. After wires are connected, tuck them carefully inside the wall hole.
7. Slide acrylic diffuser and PC strip slightly out of the way to review the plastic anchor location on the back, then fasten the fixture to the wall using wood screw (G).
8. Secure the end cap to the fixture using mounting screw (B) to seal the acrylic diffuser.

waclighting.com
Phone (800) 526.2588
Fax (800) 526.2585

Headquarters/Eastern Distribution Center
44 Harbor Park Drive
Port Washington, NY 11050

Central Distribution Center
1600 Distribution Ct
Lithia Springs, GA 30122

Western Distribution Center
1750 Archibald Avenue
Ontario, CA 91760

INSTALLATION INSTRUCTION

358 – LED Wall Sconce

WS-35873/WS-35897

WAC LIGHTING
Responsible Lighting®

WARNING

IMPORTANT: NEVER attempt any work without shutting off the electricity.

- Read all instructions before installing.
- System is intended for installation by a qualified electrician in accordance with the National Electrical Code and local regulations.
- Go to the main fuse box, or circuit breaker. Place the main power switch in the "OFF" position and unscrew the fuse(s) or switch "OFF" the circuit breaker switch(es) that control the power to the fixture or room that you are working on.
- Place the wall switch in the "OFF" position.

CAUTION

- All parts must be used as indicated in these instructions. Do not substitute any parts, leave parts out, or use any parts that are worn out or broken. Failure to follow this instruction could invalidate the ETL/CETL listing of this fixture.
  CAUTION When handling the fixture, do not apply pressure to the LEDs. Hold the fixture by the base only.

AVERTISSEMENT

IMPORTANT : Coupez l'électricité avant TOUTE manipulation.

- Lisez toutes les instructions avant d'installer.
- Système est destiné à être installé par un électricien qualifié en conformité avec le code national de l'électricité et les règlements locaux.
- Accédez au panneau central de disjoncteurs ou de fusibles de votre demeure et placez l'interrupteur principal en position d'arrêt (« OFF »).
- Placez l'interrupteur mural en position d'arrêt (« OFF »).

MISE EN GARDE

- Toutes les pièces doivent être utilisées tel qu'il est indiqué dans ces instructions. Ne remplacez pas les pièces, n'en laissez pas de côté et ne les utilisez pas si elles sont usées ou brisées. Le non-respect de ces instructions peut annuler l'homologation ETL/CETL du luminaire. MISE EN GARDE Ors de la manipulation de l'appareil, ne pas appliquer de pression à la LED, tenir l'appareil par la seule base.

ADVERTENCIA

IMPORTANTE: NUNCA intente hacer trabajos sin desconectar el suministro eléctrico.

- Lea y comprenda todas las instrucciones e ilustraciones por completo antes de proceder con el ensamblaje e insta lación de esta lámpara.
- Sistema está disenado para ser instalado por un electricista calificado, de acuerdo con el código eléctrico nacional y las normas locales.
- Diríjase a la caja de fusibles o a la caja del interruptor de circuito principal en su hogar. Coloque el interruptor de ali mentación principal en la posición "OFF" (APAGADO).
- Coloque el interruptor de la pared en la posición "OFF" (APAGADO).

PRECAUCIÓN

- Todas las piezas deben usarse como lo indican estas instrucciones. No reemplace las piezas, noomita piezas durante la instalación ni utilice piezas gastadas o rotas. El incumplimiento de esta indicación podría invalidar la calificación
  ETL/CETL esta lámpara. PRECAUCIÓN Al manipular el aparato, no aplique presión a los LED, mantenga el aparato en la base sólo.

HARDWARE

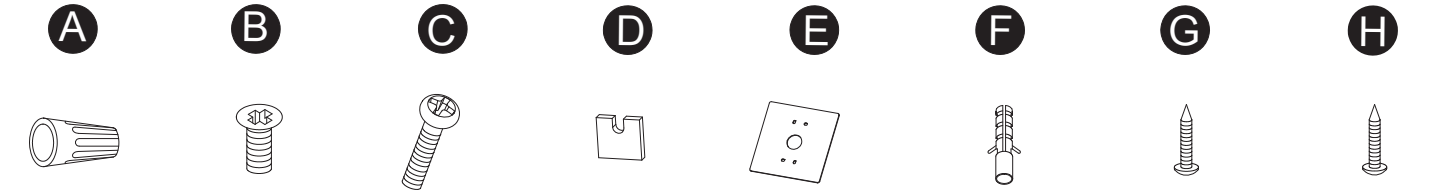

A	B	C	D	E	F	G	H
Wire Connector Qty: 3pcs+1 Extra 7EAC112201	Mounting Screw Qty:2pcs+1 Extra 7MPF0308S1(AL) 4MPF0308S3W5(WT) 1/8"-40X3/8 Nickel Plating/White	Assembly Screw Qty:2pcs+1 Extra 1/8"-40x1 Nickel Plating	Silicon Gasket Qty:2pcs 7TGD272501CL	Decorative Plate Qty:1pc 4MBA121244BA(AL) 4MBA121244W10(WT)	Plastic Anchor Qty: 6pcs+1 Extra 7TDD082401	Wood Screw Qty: 2pcs+1 Extra 7MPF2204J2 Φ4X22	Tapping Screw Qty: 4pcs+1 Extra 7MPF033502

waclighting.com
Phone (800) 526.2588
Fax (800) 526.2585

Headquarters/Eastern Distribution Center
44 Harbor Park Drive
Port Washington, NY 11050

Central Distribution Center
1600 Distribution Ct
Lithia Springs, GA 30122

Western Distribution Center
1750 Archibald Avenue
Ontario, CA 91760

WAC Lighting retains the right to modify the design of our products at any time as part of the company's continuous improvement program.

INSTALLATION INSTRUCTION

358 – LED Wall Sconce

WS-35873/WS-35897

WAC LIGHTING
Responsible Lighting®

Fig.1

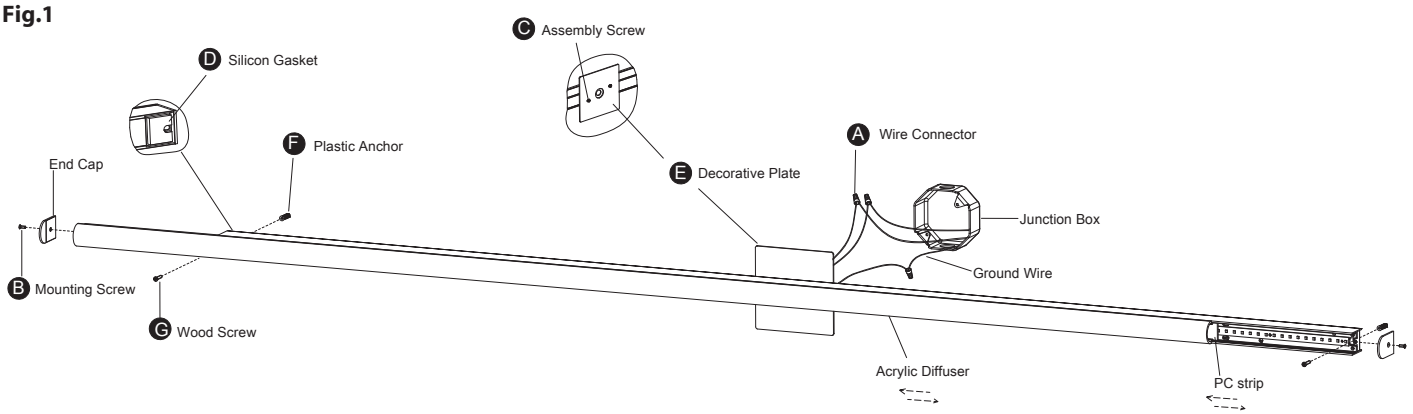

Fig.2

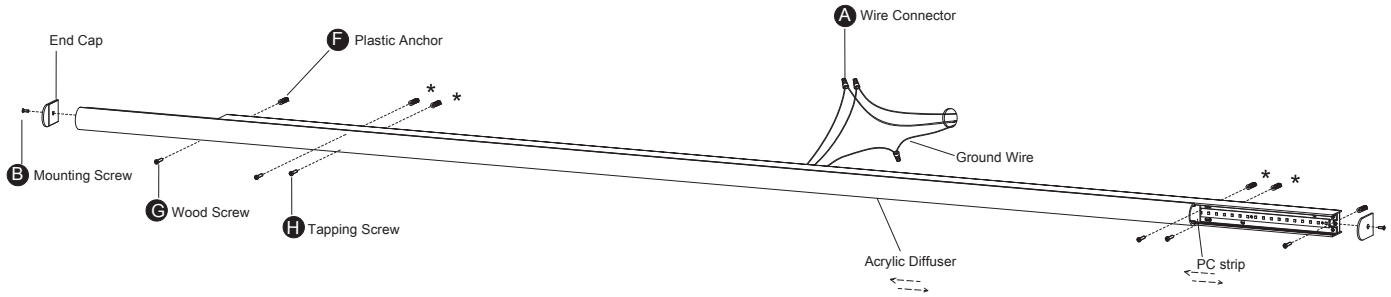

Installation Location

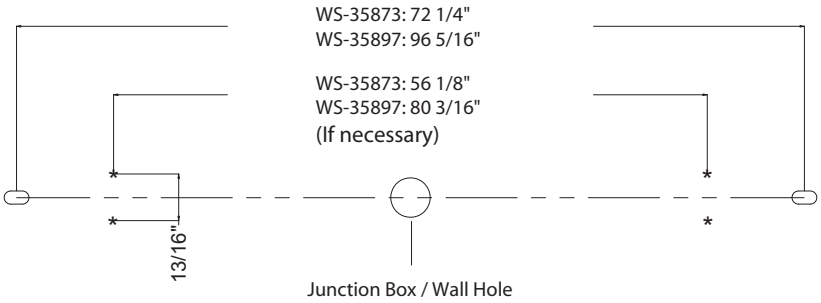

Fig.3 Wiring

Fixture Wires	House Wires
Black or Smooth	Black (Hot)
Fixture Wires	**House Wires**
White or Ribbed	White (Neutral)
Fixture Wires	**House Wires**
Bare wire (Ground)	Green or Bare Copper (Ground)

waclighting.com
Phone (800) 526.2588
Fax (800) 526.2585

Headquarters/Eastern Distribution Center
44 Harbor Park Drive
Port Washington, NY 11050

Central Distribution Center
1600 Distribution Ct
Lithia Springs, GA 30122

Western Distribution Center
1750 Archibald Avenue
Ontario, CA 91760

PREPARATION

1. Shut off the power at the circuit breaker and remove existing fixture, including the crossbar.
2. Carefully unpack your new fixture and lay out all the parts on a clear area. Be careful not to lose any small parts necessary for installation.

MOUNT ON THE JUNCTION BOX (Fig. 1)

3. Drill a fixture mounting hole according to (installation location), insert the plastic anchor (F).Line up the center line of the drill holes with respect to the center line of the junction box to allow the decorative plate (E) properly cover up the junction box opening on the wall.
4. Secure the decorative plate (E) to the fixture with assembly screw (C), then replace the existing silicon gasket with the supplied silicon gasket (D)
5. Remove the mounting screw (B) and the end cap from the fixture.
6. Connect the fixture's wires to house wires as shown in Fig.3, making sure that all wire connectors (A) are secured. If your outlet box has a green or bare copper ground wire, connect the fixture's ground wire to it. Otherwise, tuck the fixture's ground wire directly to the fixture. After wires are connected, tuck them carefully inside the junction box.
7. Slide acrylic diffuser and PC strip slightly out of the way to review the plastic anchor location on the back, then fasten the fixture to the wall using wood screw (G), make sure to align the decorative plate to adequately cover the junction box wall opening.
8. Secure the end cap to the fixture using mounting screw (B) to seal the acrylic diffuser.

OR

MOUNT WITHOUT JUNCTION BOX (Fig. 2)

3. Drill a fixture mounting hole according to (installation location), insert the plastic anchor (F).
4. Remove the mounting screw (B) and the end cap from the fixture.
5. Drill a small access hole in the wall behind the fixture and pull the house wires through the wall.
6. Connect the fixture's wires to house wires as shown in Fig.3, making sure that all wire connectors (A) are secured. If your outlet box has a green or bare copper ground wire, connect the fixture's ground wire to it. Otherwise, tuck the fixture's ground wire directly to the fixture. After wires are connected, tuck them carefully inside the wall hole.
7. Slide acrylic diffuser and PC strip slightly out of the way to review the plastic anchor location on the back, then fasten the fixture to the wall using wood screw (G).

* If the fixture and wall have a large gap, tapping screw (H) can be used when installing the fixture.

8. Secure the end cap to the fixture using mounting screw (B) to seal the acrylic diffuser.

waclighting.com
Phone (800) 526.2588
Fax (800) 526.2585

Headquarters/Eastern Distribution Center
44 Harbor Park Drive
Port Washington, NY 11050

Central Distribution Center
1600 Distribution Ct
Lithia Springs, GA 30122

Western Distribution Center
1750 Archibald Avenue
Ontario, CA 91760

WAC Lighting retains the right to modify the design of our products at any time as part of the company's continuous improvement program.